C205WS 8.5kW 16Amp 3 Phase

Buttress Group Ltd.
Top Station Road, Brackley,
Northants NN13 7UG, UK

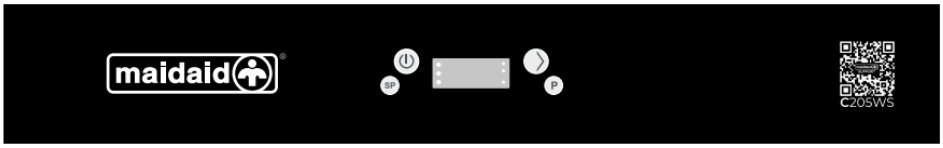

	Overall dimensions (W x D x H)	*mm*	**633 x 750 x 1560* (2060)†**
	Packaging dimensions (W x D x H)	*mm*	**760 x 840 x 1600**
	Gross weight	*Kg*	**99**
	Net weight	*Kg*	**89**
	Cubic volume	*m³*	**0.98**
	Rack size	*mm*	**500 x 500**
	Door opening	*mm*	**470**
	Max useable height	*mm*	**450**
	Rack guide rails		**inox-side wings in composite**
	Hood construction		**single skin**
	Tank construction		**moulded**
	Tank volume	*L*	**20**
	Tank heating element	*kW*	**3.0**
	Surface scrap trays		**composite** (2mm mesh)
	Wash arms		**parallel** (quick release)
	Wash pump type		**dual flow**
	Wash pump power	*kW*	**0.5**
	Wash temperature	*°C*	**55 - 60** (adjustable)
	Boiler type		**open**
	Boiler volume	*L*	**7.0**
	Breaktank		**yes**
	Boiler heating element	*kW*	**5.0**
	Rinse booster pump		**yes**
	Rinse booster pump power	*kW*	**0.15**
	Rinse temperature	*°C*	**70 - 82** (adjustable)
	Rinse arms		**parallel** (quick release)
	Drain system		**partial drain**
	Drain filter		**triple filter**
	Drain pump		**yes**
	Rinse aid dispenser	*peristaltic*	**yes**
	Detergent dispenser	*peristaltic*	**yes**
	Water consumption per cycle	*L*	**1.5 - 2.0**
	Inlet water pressure	*bar*	**0.5 - 6.0**
	Fast program (GLS1)	*sec*	**75**
	Total programs	*programs*	**9**
	Total power	*kW*	**8.5**
	Electric connection	*V-Ph-Hz*	**400V 3+N 50Hz**
	Fuse	*A*	**16**
	Water softener		**yes**

*Minimum height (+60mm with adjustable feet)
†Minimum height with hood open (+60mm with adjustable feet)

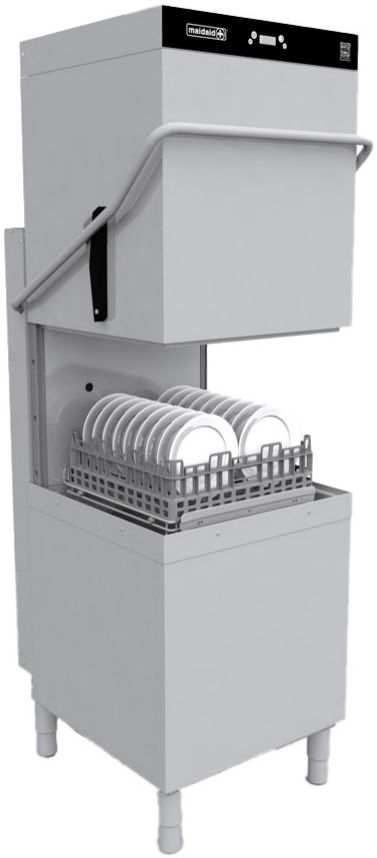

Supplied with

Flat rack	1
Plate rack	1
Cutlery rack	1
Electric cable	1
Drain hose	1
Fill hose	1

C205WS 8.5kW 16Amp 3 Phase

Buttress Group Ltd.
Top Station Road, Brackley,
Northants NN13 7UG, UK

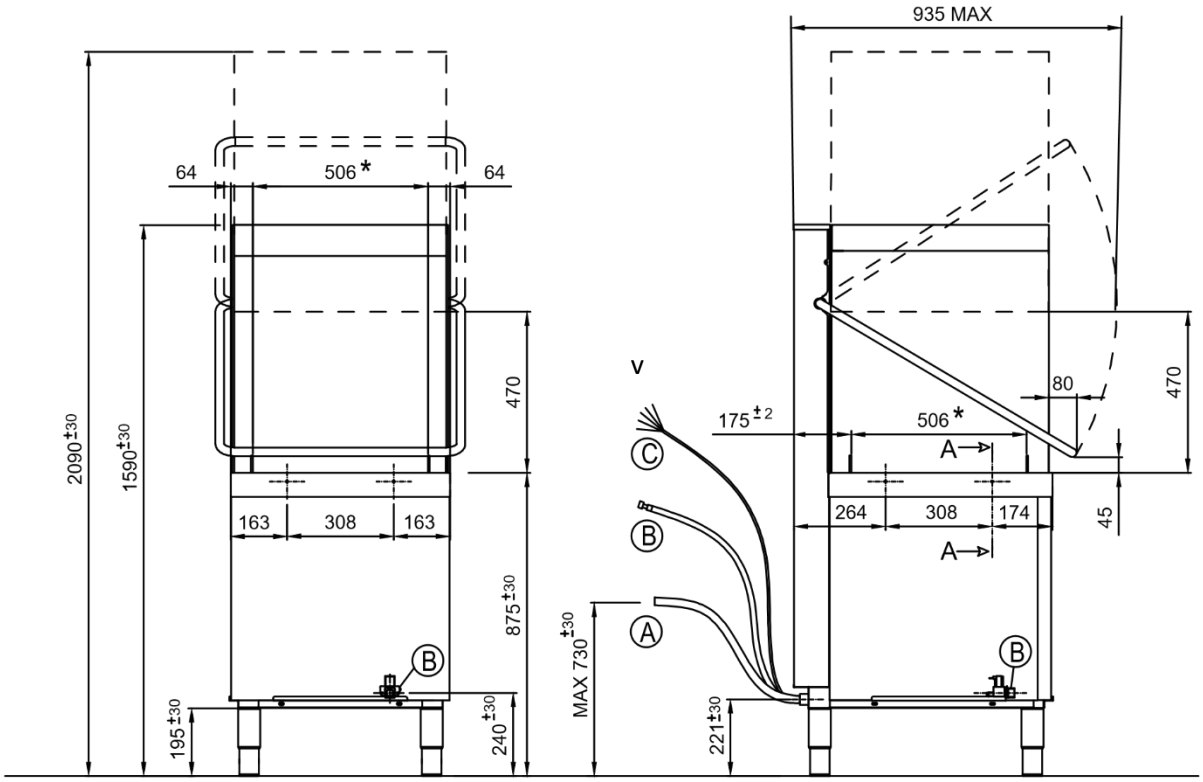

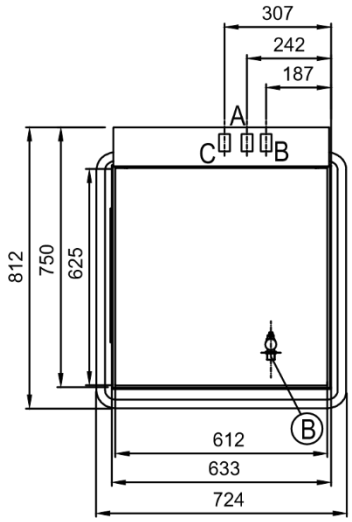

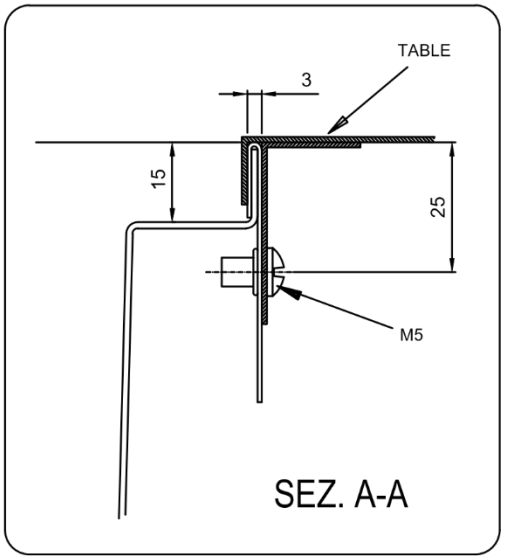

A		⌀ 32 mm
B		G 3/4"
C		Power supply

* Available space for basket on the basket carrier

All services must be within 1 metre

T: 03451 308 070
E: sales@maidaid-halcyon.co.uk
Issue: 1.2