C205WSHR 8.5kW 16A 3 Phase

Buttress Group Ltd.
Top Station Road, Brackley,
Northants NN13 7UG, UK

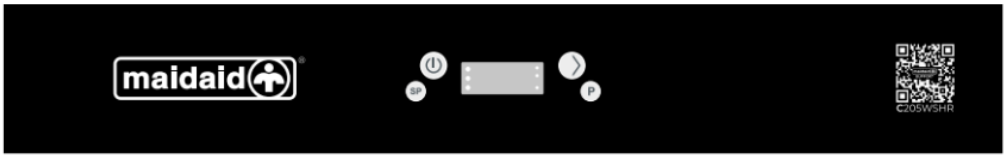

	Overall dimensions (W x D x H)	*mm*	**633 x 750 x 2253***
	Packaging dimensions (W x D x H) (RC)	*mm*	**760 x 840 x 1600 (700x750x30)**
	Gross weight (RC)	*Kg*	**105 (25)**
	Net weight (RC)	*Kg*	**95 (23)**
	Cubic volume (RC)	*m^3*	**1.0 (0.15)**
	Rack size	*mm*	**500 x 500**
	Door opening	*mm*	**470**
	Max useable height	*mm*	**450**
	Rack guide rails		**inox-side wings in composite**
	Hood construction		**single skin**
	Tank construction		**moulded**
	Tank volume	*L*	**20**
	Tank heating element	*kW*	**3.0**
	Surface scrap trays		**composite** (2mm mesh)
TANK	Wash arms		**parallel** (quick release)
	Wash pump type		**dual flow**
	Wash pump power	*kW*	**0.5**
	Wash temperature	*°C*	**55 - 60** (adjustable)
	Boiler type		**open**
	Boiler volume	*L*	**7.0**
	Breaktank		**yes**
	Boiler heating element	*kW*	**5.0**
BOILER	Rinse booster pump		**yes**
	Rinse booster pump power	*kW*	**0.15**
	Rinse temperature	*°C*	**70 - 85** (adjustable)
	Rinse arms		**parallel** (quick release)
	Drain system		**partial drain**
	Drain filter		**triple filter**
	Drain pump		**yes**
	Rinse aid dispenser	*peristaltic*	**yes**
	Detergent dispenser	*peristaltic*	**yes**
	Water consumption per cycle	*L*	**1.5 - 2.0**
	Inlet water pressure	*bar*	**0.5 - 6.0**
	Fast program (GLS1)	*sec*	**75**
	Total programs	*programs*	**9**
	Total power	*kW*	**8.5**
	Electric connection	*V-Ph-Hz*	**400V 3+N 50Hz**
	Fuse	*A*	**16**
	Water softener		**yes** (continuous)
	Heat recovery fan	*kW*	**0.76**
	Heat recovery air flow	*m^3/h*	**405**
	Residual heat emission SENSITIVE	*kW*	**0.6**
	Residual heat emission LATENT	*kW*	**0.6**

*Minimum height (+60mm with adjustable feet)

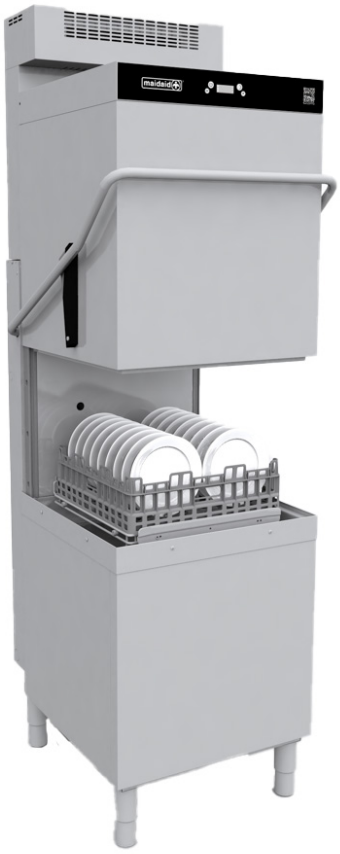

Supplied with

Flat rack	1
Plate rack	1
Cutlery rack	1
Electric cable	1
Drain hose	1
Fill hose	1

C205WSHR

8.5kW 16A
3 Phase

Buttress Group Ltd.
Top Station Road, Brackley,
Northants NN13 7UG, UK

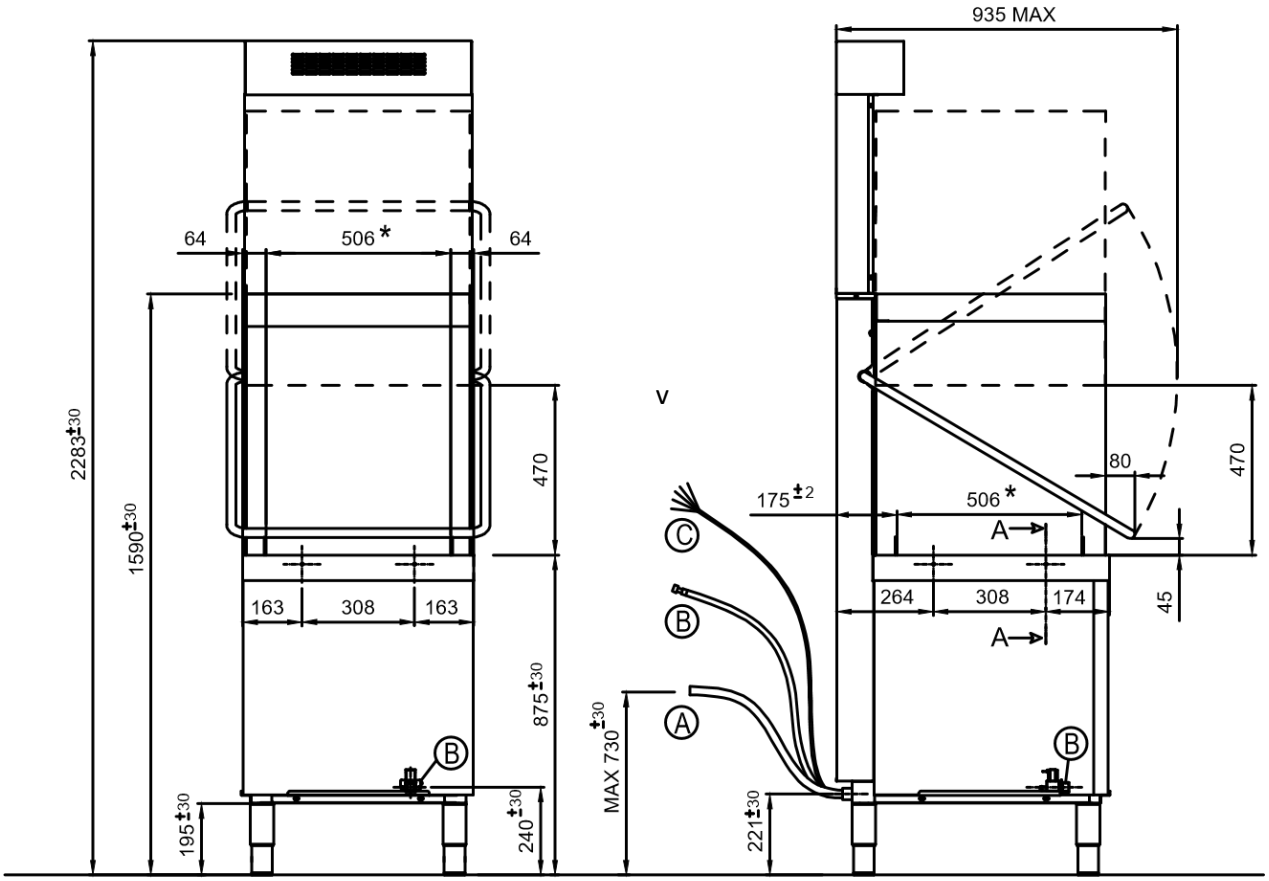

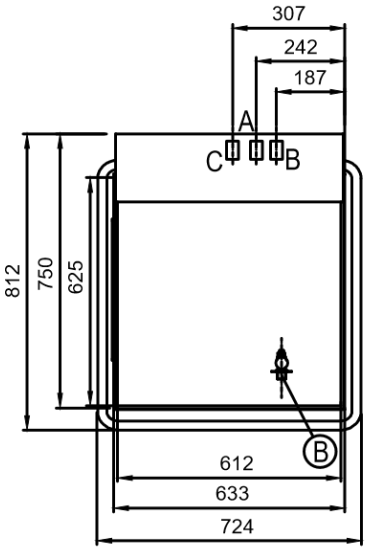

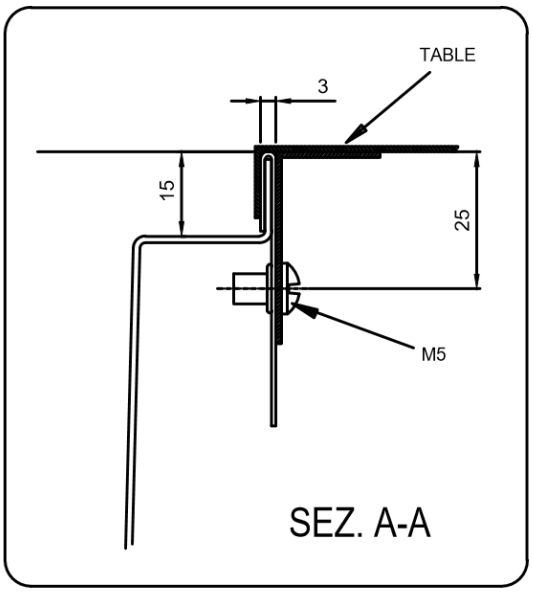

A		⌀ 32 mm
B		G 3/4"
C		Power supply

* Available space for basket on the basket carrier

All services must be within 1 metre

T: 03451 308 070
E: sales@maidaid-halcyon.co.uk
Issue: 1.2